Current part is item (10,16) on diagram. Available at www.oshkoshequipment.com

(1) ILLUS. (a) FIG. NO.	(b) ITEM NO.	(2) SMR CODE	(3) NATIONAL STOCK NUMBER	(4) PART NUMBER	(5) FSCM	(6) DESCRIPTION USABLE ON CODE	(7) U/M	(8) QTY INC IN UNIT
						1002-DIFFERENTIAL(CONT'D)		
81	25	PAHZZ	5310-00-494-8498	10896715	19207	WASHER,FLAT	EA	4
81	26	PAHZZ	5306-00-689-8852	MS51095-328	96906	BOLT:LOCK ADJUSTING RING	EA	2
81	27	PAHZZ	5310-00-752-1786	7521786	19207	WASHER,KEY:CASE BEARING ADJUSTING NUT	EA	2
81	28	PAHZZ	3130-00-087-3916	7700130	19207	CAP ASSEMBLY	EA	2
81	29	XBHZZ		712521	21450	BEARING ASSEMBLY	EA	2
81	30	XAHZZ		7700132	19207	CASE AND GEAR ASSEMBLY	EA	1
81	31	XBHZZ		10938304-1	19207	NUT,SLOTTED,HEXAGON	EA	8
81	32	PAHZZ	5306-00-752-1790	7521790	19207	BOLT,MACHINE	EA	8
81	33	PAHZZ	2520-00-752-1778	7521778	19207	CASE ASSEMBLY	EA	2
81	34	KFHZZ		7529060	19207	WASHER,THRUST:SIDE GEAR, (PART OF KIT,P/N5702299)	EA	2
81	35	KFHZZ		7529061	19207	GEAR:SIDE(PART OF KIT, P/N5702299)	EA	2
81	36	KFHZZ		7529058	19207	WASHER,THRUST:PINION (PART OF KIT,P/N5702299)	EA	4
81	37	KFHZZ		8380939	19207	PINION ASSEMBLY(PART OF KIT,P/N5702299)	EA	4
81	38	KFHZZ		8380940	19207	SPIDER(PART OF KIT, P/N5702299)	EA	1
81	39	PAHZZ	3020-00-752-1686	7521686	19207	GEAR,HELICAL	EA	1
81	40	XAHZZ		7529063	19207	CARRIER	EA	1
82	1	PAFZZ	5315-00-013-7214	MS24665-359	96906	PIN,COTTER	EA	2
82	2	PAFZZ	5310-00-752-1234	7521234	19207	NUT,SLOTTED,HEXAGON	EA	2
82	3	PAFZZ	5310-00-752-1235	7521235	19207	WASHER,FLAT	EA	2
82	4	PAFZZ	2520-00-752-1276	7521276	19207	FLANGE:COMPANION,THROUGH SHAFT, W/DEFLECTOR ASSEMBLY	EA	2
82	5	PAFZZ	2520-00-692-6080	7521242	19207	DEFLECTOR,DIRT AND LIQUID: DUST,COMPANION FLANGE	EA	2
82	6	PAFZZ	2520-00-134-5124	8757674	19207	FLANGE,DIFFERENTIAL	EA	2
82	7	PAHZZ	5305-00-071-2068	MS90728-112	96906	SCREW,CAP,HEXAGON HEAD	EA	12
82	8	PAHZZ	5310-00-079-1979	7748742	19207	WASHER,FLAT	EA	12
82	9	PAHZZ	2520-00-752-1703	7521703	19207	RETAINER ASSEMBLY:THROUGH SHAFT REAR BEARING,W/OIL SEAL ASSEMBLY	EA	1
82	10	PAHZZ	5330-00-143-8666	7521241	19207	SEAL,PLAIN,ENCASED: OIL,THROUGH RETAINER	EA	1

Current part is item (10,16) on diagram. Available at www.oshkoshequipment.com

Current part is item (10,16) on diagram. Available at www.oshkoshequipment.com

(1) ILLUS. (a) FIG. NO.	(b) ITEM NO.	(2) SMR CODE	(3) NATIONAL STOCK NUMBER	(4) PART NUMBER	(5) FSCM	(6) DESCRIPTION USABLE ON CODE	(7) U/M	(8) QTY INC IN UNIT
						1002-DIFFERENTIAL(CONT'D)		
82	11	XAHZZ		8757660	19207	RETAINER	EA	1
82	12	KFHZZ		7521709	19207	SHIM:0.003(PART OF SET, P/N7521764	EA	4
82	12	KFHZZ		7521708	19207	SHIM:0.005(PART OF SET, P/N7521764)	EA	6
82	12	KFHZZ		7521707	19207	SHIM:0.010(PART OF SET, P/N7521764)	EA	2
82	13	XBHZZ		712157	21450	BEARING ASSEMBLY	EA	1
82	14	KFHZZ		7529055	19207	PINION(PART OF SET, P/N7521712)	EA	1
82	15	PAHZZ	2520-00-752-1704	7521704	19207	RETAINER ASSEMBLY:THROUGH SHAFT FRONT BEARING W/OIL SEAL ASSEMBLY	EA	1
82	16	PAHZZ	5330-00-143-8666	7521241	19207	SEAL,PLAIN,ENCASED: OIL THROUGH RETAINER	EA	1
82	17	XAHZZ		7700134	19207	RETAINER	EA	1
82	18	PAHZZ	5365-00-248-4773	7700137	19207	SPACER,RING	EA	1
82	19	XBHZZ		714009	21450	BEARING ASSEMBLY	EA	1
82	20	PAHZZ	2530-00-752-1716	7521716	19207	SHAFT	EA	1
81		PAHZZ	5330-00-752-1764	7521764	19207	GASKET AND SHIM SET: DIFFERENTIAL	EA	1
81	5					GASKET	EA	1
81	9					GASKET	EA	1
81	13					SHIM	EA	1
81	13					SHIM	EA	4
81	13					SHIM	EA	1
82	12					SHIM	EA	4
82	12					SHIM	EA	6
82	12					SHIM	EA	2
81		PAHZZ	3020-00-752-1712	7521712	19207	GEAR SET:BEVEL(MATCHED)	SE	1
81	22					GEAR	EA	1
82	14					PINION	EA	1
81		PAHZZ	2520-00-629-8827	5702299	19207	PARTS KIT,DIFFERENTIAL	EA	1
81	34					WASHER	EA	2
81	35					GEAR	EA	2

Current part is item (10,16) on diagram. Available at www.oshkoshequipment.com

Current part is item (10,16) on diagram. Available at www.oshkoshequipment.com

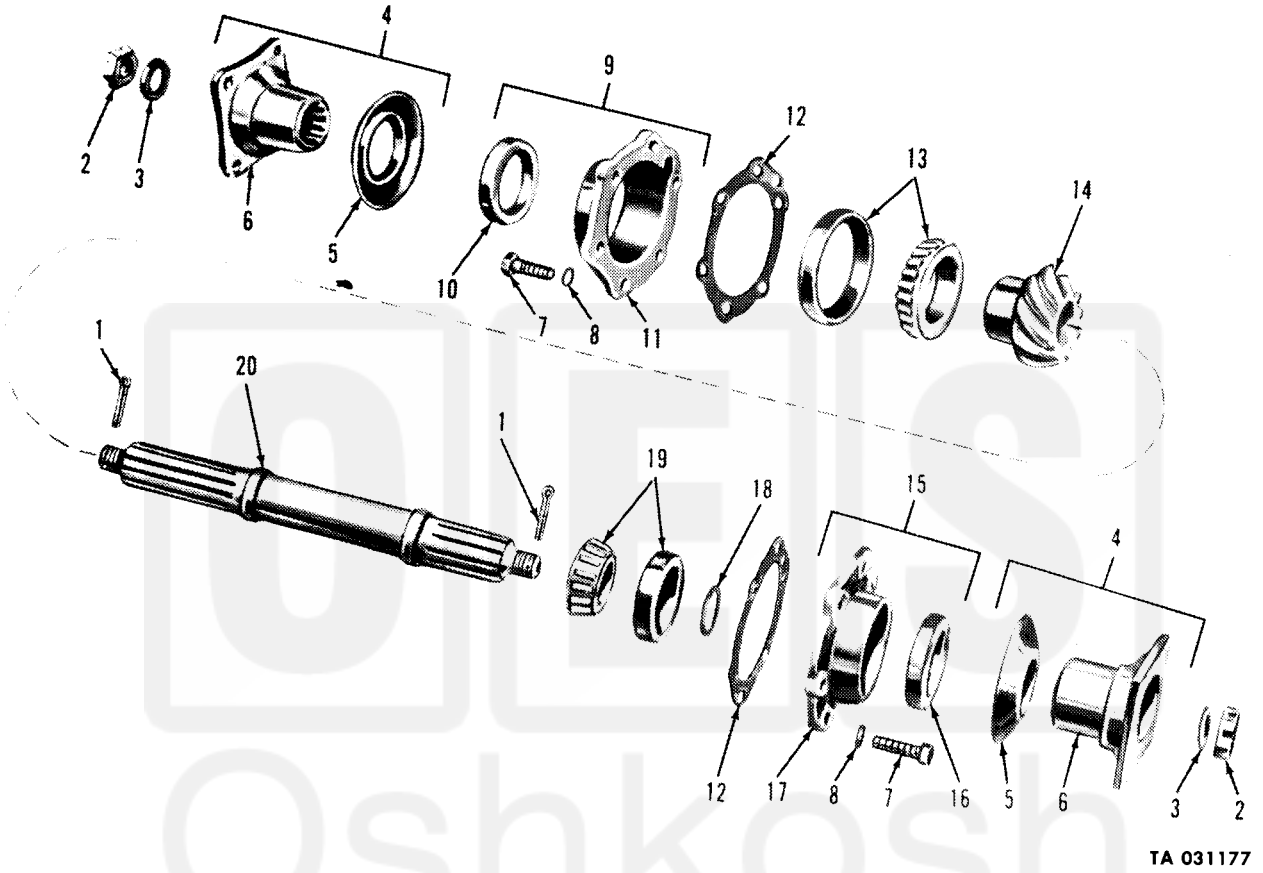

Figure 82. Front differential.

Current part is item (10,16) on diagram. Available at www.oshkoshequipment.com

Current part is item (10,16) on diagram. Available at www.oshkoshequipment.com

(1) ILLUS. (a) FIG. NO.	(b) ITEM NO.	(2) SMR CODE	(3) NATIONAL STOCK NUMBER	(4) PART NUMBER	(5) FSCM	(6) DESCRIPTION USABLE ON CODE	(7) U/M	(8) QTY INC IN UNIT
						1102-DIFFERENTIAL(CONT'D)		
86A	27	PAHZZ	5310-00-752-1786	7521786	19207	WASHER,KEY:CASE BEARING ADJUSTING NUT	EA	2
86A	28	PAHZZ	3130-00-087-3916	7700130	19207	CAP ASSEMBLY	EA	2
86A	29	XBHZZ		712521	21450	BEARING ASSEMBLY	EA	2
86A	30	XAHZZ		7700132	19207	CASE AND GEAR ASSEMBLY	EA	1
86A	31	XBHZZ		10938304-1	19207	NUT,SLOTTED,HEXAGON	EA	8
86A	32	PAHZZ	5306-00-752-1790	7521790	19207	BOLT,MACHINE	EA	8
86A	33	PAHZZ	2520-00-752-1778	7521778	19207	CASE ASSEMBLY	EA	2
86A	34	KFHZZ		7529060	19207	WASHER,THRUST:SIDE GEAR (PART OF KIT,P/N5702299)	EA	2
86A	35	KFHZZ		7529061	19207	GEAR:SIDE(PART OF KIT, P/N5702299)	EA	2
86A	36	KFHZZ		7529058	19207	WASHER,THRUST:PINION (PART OF KIT,P/N5702299)	EA	4
86A	37	KFHZZ		8380939	19207	PINION ASSEMBLY(PART OF KIT, P/N5702299)	EA	4
86A	38	KFHZZ		8380940	19207	SPIDER(PART OF KIT, P/N5702299)	EA	1
86A	39	PAHZZ	3020-00-752-1686	7521686	19207	GEAR,HELICAL	EA	1
86A	40	XAHZZ		7529063	19207	CARRIER	EA	1
86B	1	PAFZZ	5315-00-013-7214	MS24665-359	96906	PIN,COTTER	EA	2
86B	2	PAFZZ	5310-00-752-1234	7521234	19207	NUT,SLOTTED,HEXAGON	EA	2
86B	3	PAFZZ	5310-00-752-1235	7521235	19207	WASHER,FLAT	EA	2
86B	4	PAFZZ	2520-00-752-1276	7521276	19207	FLANGE:COMPANION,THROUGH SHAFT,W/DEFLECTOR ASSEMBLY	EA	2
86B	5	PAFZZ	2520-00-692-6080	7521242	19207	DEFLECTOR,DIRT AND LIQUID:DUST,COMPANION FLANGE	EA	2
86B	6	PAFZZ	2520-00-134-5124	8757674	19207	FLANGE,DIFFERENTIAL	EA	2
86B	7	PAHZZ	5305-00-071-2068	MS90728-112	96906	SCREW,CAP,HEXAGON HEAD	EA	12
86B	8	PAHZZ	5310-00-079-1979	7748742	19207	WASHER,FLAT	EA	12
86B	9	PAHZZ	2520-00-752-1703	7521703	19207	RETAINER ASSEMBLY:THROUGH SHAFT REAR BEARING,W/OIL SEAL ASSEMBLY	EA	1
86B	10	PAHZZ	5330-00-143-8666	7521241	19207	SEAL,PLAIN,ENCASED:OIL THROUGH RETAINER	EA	1
86B	11	XAHZZ		8757660	19207	RETAINER	EA	1
86B	12	KFHZZ		7521709	19207	SHIM:0.003(PART OF SET, P/N7521764)	EA	4

Current part is item (10,16) on diagram. Available at www.oshkoshequipment.com

Current part is item (10,16) on diagram. Available at www.oshkoshequipment.com

(1) ILLUS. (a) FIG. NO.	(b) ITEM NO.	(2) SMR CODE	(3) NATIONAL STOCK NUMBER	(4) PART NUMBER	(5) FSCM	(6) DESCRIPTION USABLE ON CODE	(7) U/M	(8) QTY INC IN UNIT
						1102-DIFFERENTIAL(CONT'D)		
86B	12	KFHZZ		7521708	19207	SHIM:0.005(PART OF SET, P/N7521764)	EA	6
86B	12	KFHZZ		7521707	19207	SHIM:0.010(PART OF SET, P/N7521712)	EA	2
86B	13	XBHZZ		712157	21450	BEARING ASSEMBLY	EA	1
86B	14	KFHZZ		7529055	19207	PINION(PART OF SET, P/N7521712)	EA	1
86B	15	PAHZZ	2520-00-752-1704	7521704	19207	RETAINER ASSEMBLY:THROUGH SHAFT FRONT BEARING,W/OIL SEAL ASSEMBLY	EA	1
86B	16	PAHZZ	5330-00-143-8666	7521241	19207	SEAL,PLAIN,ENCASED: OIL,THROUGH RETAINER	EA	1
86B	17	XAHZZ		7700134	19207	RETAINER	EA	1
86B	18	PAHZZ	5365-00-248-4773	7700137	19207	SPACER,RING	EA	1
86B	19	XBHZZ		714009	21450	BEARING ASSEMBLY	EA	1
86B	20	PAHZZ	2530-00-752-1716	7521716	19207	SHAFT	EA	1
86A		PAHZZ	5330-00-752-1764	7521764	19207	GASKET AND SHIM SET: DIFFERENTIAL	EA	2
86A	5					GASKET	EA	1
86A	9					GASKET	EA	1
86A	13					SHIM	EA	1
86A	13					SHIM	EA	1
86A	13					SHIM	EA	4
86B	12					SHIM	EA	4
86B	12					SHIM	EA	6
86B	12					SHIM	EA	2
86A		PAHZZ	3020-00-752-1712	7521712	19207	GEAR SET:BEVEL(MATCHED)	SE	2
86A	22					GEAR	EA	1
86B	14					PINION	EA	1
86A		PAHZZ	2520-00-629-8827	5702299	19207	PARTS KIT,DIFFERENTIAL	EA	2
86A	34					WASHER	EA	2
86A	35					GEAR	EA	4
86A	36					WASHER	EA	4
86A	37					PINION ASSEMBLY	EA	4
86A	38					SPIDER	EA	1

Current part is item (10,16) on diagram. Available at www.oshkoshequipment.com

Current part is item (10,16) on diagram. Available at www.oshkoshequipment.com

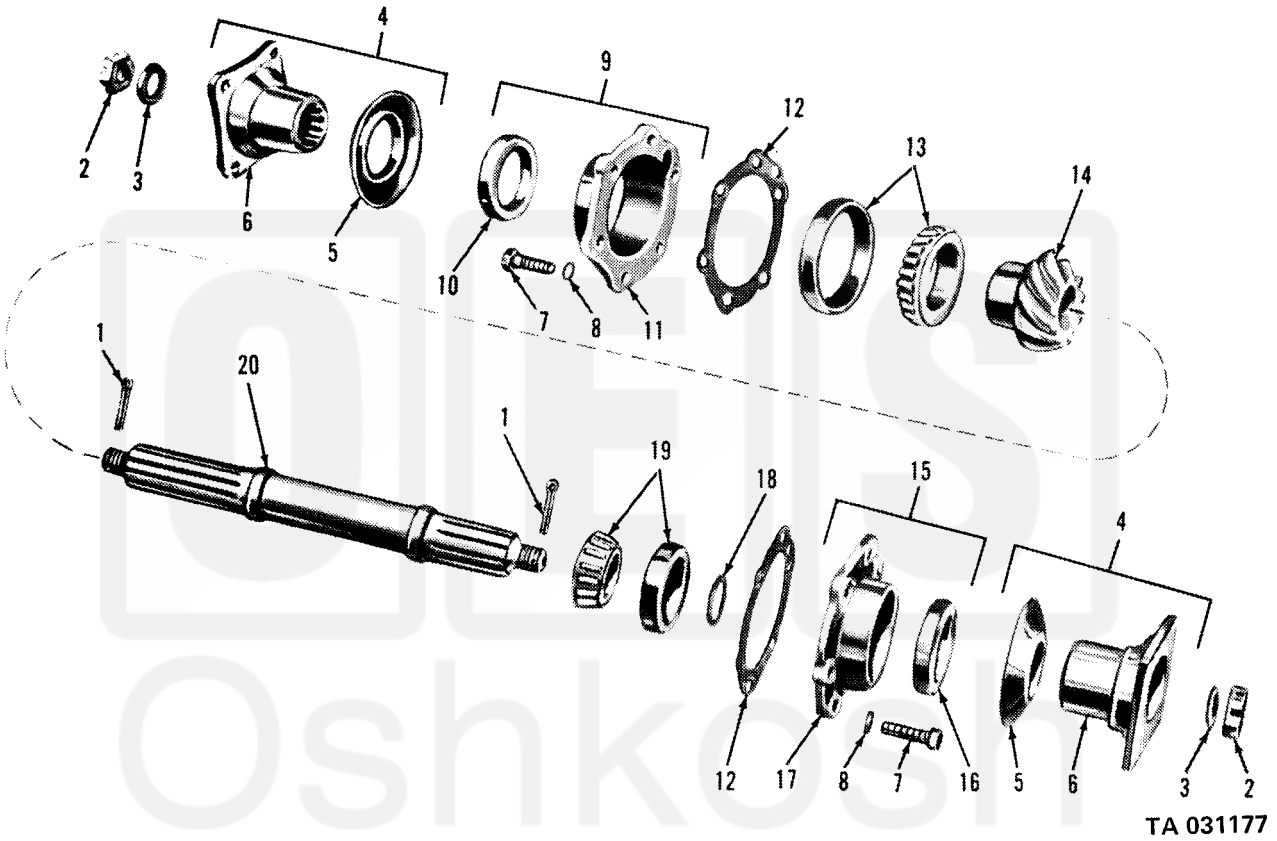

Figure 86b. Rear differential.

Current part is item (10,16) on diagram. Available at www.oshkoshequipment.com